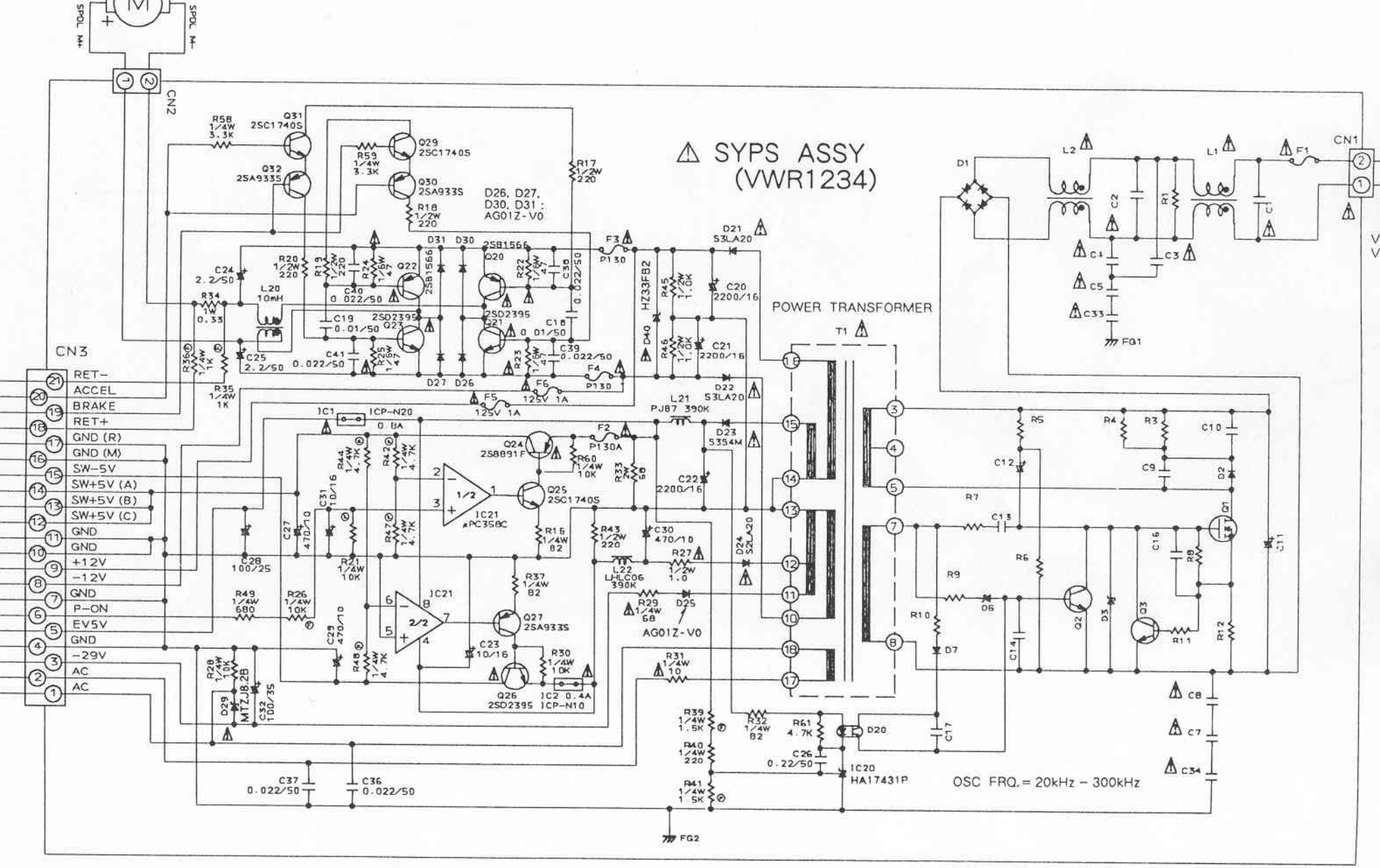
SYPS ASSY
(VWR1234)
POWER TRANSFORMER
T1
CN1
CN2
CN3
RET-
ACCEL
BRAKE
RET+
GND (R)
GND (M)
SW-5V
SW+5V (A)
SW+5V (B)
SW+5V (C)
GND
GND
+12V
-12V
GND
P-ON
EV5V
GND
-29V
AC
AC
D26, D27,
D30, D31 :
AG01Z-V0
AG01Z-V0
IC20
HA17431P
OSC FRQ. = 20kHz - 300kHz
FG1
FG2